CDAS – Clean Dry Air System

CDAS HL 050 - CDAS HL 085

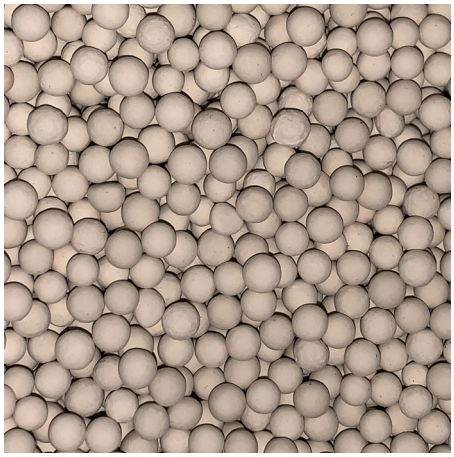

Adsorption Dryers

Whether a compressed air user wants to control the growth of micro-organisms (essential for direct and in-direct contact applications in the food, beverage & pharmaceutical industries), ensure air used for critical applications / instrumentation is free from water contamination or has external piping where low ambient temperature can cause condensation, adsorption dryers are the go to dryer technology.

There are many different adsorption dryer technologies available and whilst they all reduce water from the compressed air in the same way, they differ in the way they regenerate the desiccant material.

Heatless Adsorption Dryers

The simplest and most common method used to regenerate the adsorbent desiccant material is the 'heatless' method (so called as it does not use heat for desiccant regeneration).

Using a proportion of the clean, dry process air for regeneration, heatless dryers typically have the lowest capital costs of all adsorption dryer types (due to the simplicity of the heatless design).

Being very robust and having fewer components, they typically have the lowest maintenance cost of all the adsorption technologies.

Heatless dryers are available to suit all compressed air flow rates from small to large, whereas the more complicated regeneration methods are often only available for higher flow rates due to cost and complexity of the designs.



Advantages

- Parker CDAS dryers provide a constant outlet dewpoint in accordance with ISO8573-1 classes 1, 2 or 3 for water vapour
- Parker CDAS dryers use clean, dry purge air for regeneration, eliminating any risk of damage to the adsorption bed or re-contamination of the downstream compressed air
- Parker CDAS dryer performance has been tested in accordance with ISO7183, the international standard for compressed air dryer testing
- The dewpoint performance of Parker CDAS dryers has been 3rd party validated by Lloyds Register to ISO8573-1 air purity classifications
- No heat is used for regeneration; therefore, no insulation is required and loss of dewpoint on column changeover due to inefficient cool down is eliminated
- Parker CDAS dryers include Parker OIL-X General Purpose & High Efficiency Coalescing pre-filtration and General Purpose Dry Particulate post filtration as standard
- Full feature electronic control with dewpoint display and Energy Saving Technology fitted as standard

Dryer Performance

Dryer Models	Dewpoint (Standard)		ISO8573-1:2010 Classification (Standard)	Dewpoint (Option 1)		ISO8573-1:2010 Classification (Option 1)	Dewpoint (Option 2)		ISO8573-1:2010 Classification (Option 2)
	°C	°F		°C	°F		°C	°F	
CDAS HL 050 - 085	-40	-40	Class 2:2:2	-70	-100	Class 2:1:2	-20	-4	Class 2:3:2

ISO8573-1 Classifications when used with OIL-X pre/post filtration.

Technical Data

Dryer Models	Minimum Operating Pressure		Maximum Operating Pressure		Minimum Operating Temperature		Maximum Operating Temperature		Maximum Ambient Temperature		Electrical Supply (Standard)	Electrical Supply (Optional)	Thread Type	Noise Level
	bar g	psi g	bar g	psi g	°C	°F	°C	°F	°C	°F				dB(A)
CDAS HL 050 - 085	4	58	16	232	5	41	50	122	55	131	100-240V +/-10% 1ph 50/60Hz	24V DC	BSPP or NPT	<75

Flow Rates

Model	Pipe Size	Inlet Flow Rate			
		L/s	m^3/min	m^3/hr	cfm
CDAS HL 050	½"	15	0.92	55	32
CDAS HL 055	½"	19	1.17	70	41
CDAS HL 060	½"	25	1.50	90	53
CDAS HL 065	½"	31	1.84	110	65
CDAS HL 070	¾"	42	2.51	150	88
CDAS HL 075	1"	51	3.09	185	109
CDAS HL 080	1"	61	3.67	220	129
CDAS HL 085	1½"	83	5.01	300	177

Stated flows are for operation at 7 bar (g) (102 psi g) with reference to 20°C, 1 bar (a), 0% relative water vapour pressure. For flows at other pressures, apply the correction factors shown below.

Product Selection & Correction Factors

For correct operation, compressed air dryers must be sized using for the maximum (summer) inlet temperature, maximum (summer) ambient temperature, minimum inlet pressure, required outlet dewpoint and maximum flow rate of the installation.

To select a dryer, first calculate the MDC (Minimum Drying Capacity) using the formula below then select a dryer from the flow rate table above with a flow rate equal to or above the MDC.

Minimum Drying Capacity = System Flow x CFMIT x CFMAT x CFMIP x CFOD

CFMIT - Correction Factor Maximum Inlet Temperature

Maximum Inlet Temperature	°C	25	30	35	40	45	50
	°F	77	86	95	104	113	122
Correction Factor		1.00	1.00	1.00	1.04	1.14	1.37

CFMAT - Correction Factor Maximum Ambient Temperature

Maximum Ambient Temperature	°C	25	30	35	40	45	50
	°F	77	86	95	104	113	122
Correction Factor		1.00	1.00	1.00	1.00	1.00	1.00

CFMIP - Correction Factor Minimum Inlet Pressure

Minimum Inlet Pressure	bar g	4	5	6	7	8	9	10	11	12	13	14	15	16
	psi g	58	73	87	100	116	131	145	160	174	189	203	218	232
Correction Factor		1.60	1.33	1.14	1.00	0.89	0.80	0.73	0.67	0.62	0.57	0.53	0.50	0.47

CFOD - Correction Factor Outlet Dewpoint

Outlet Dewpoint	°C	-20	-40	-70
	°F	-4	-40	-100
Correction Factor		0.91	1.00	2.00

Controller Functions

Dryer Models	Controller Function							
	Power On Indication	Visual Fault Indication	Dewpoint Display	EST - Energy Saving Technology	Filter Service Indicator	Dryer Service Indicator	Fault Relay: Power Loss Dewpoint Alarm Sensor Failure	4-20mA Dewpoint Re-transmission
CDAS HL	•	•	•	•	•	•	•	•

Filtration (Required/Included)

Model	Pipe Size BSPP or NPT	Dryer Inlet			Dryer Outlet		
		Required	Included	Included	Not Included	Included	Not Included
		Liquid Separator	General Purpose Pre-filter	High Efficiency Filter	Oil Vapour Reduction Filter	General Purpose Dry Particulate Filter	High Efficiency Dry Particulate Filter
CDAS HL 050	½"	WSPX015C GT1 X	AOPX015C	AAPX015C	-	AOPX015C	-
CDAS HL 055	½"	WSPX015C GT1 X	AOPX015C	AAPX015C	-	AOPX015C	-
CDAS HL 060	½"	WSPX015C GT1 X	AOPX020C	AAPX020C	-	AOPX020C	-
CDAS HL 065	½"	WSPX015C GT1 X	AOPX020C	AAPX020C	-	AOPX020C	-
CDAS HL 070	¾"	WSPX025D GT1 X	AOPX025D	AAPX025D	-	AOPX025D	-
CDAS HL 075	1"	WSPX025E GT1 X	AOPX025E	AAPX025E	-	AOPX025E	-
CDAS HL 080	1"	WSPX025E GT1 X	AOPX025E	AAPX025E	-	AOPX025E	-
CDAS HL 085	1½"	WSPX030G GT1 X	AOPX030G	AAPX030G	-	AOPX030G	-

Select GT1 for BSPP Threads/Select NT2 for NPT Threads

Filtration Performance	Liquid Separator	General Purpose Coalescing Filter	High Efficiency Coalescing Filter	Oil Vapour Reduction Filter	General Purpose Dry Particulate Filter	High Efficiency Dry Particulate Filter
Filtration Grade	Grade WS	Grade AO	Grade AA	-	Grade AO	-
Filtration Type	Liquid Separator	Coalescing	Coalescing	-	Dry Particulate	-
Particle Reduction (inc water & oil aerosols)	N/A	Down to 1 micron	Down to 0.01 micron	-	Down to 1 micron	-
Maximum Remaining Oil Aerosol Content at 21°C	N/A	⩽0.5 mg/m³ (⩽0.5 ppm(w))	⩽0.01 mg/m³ (⩽0.01 ppm(w))	-	N/A	-
Maximum Remaining Oil Vapour Content at System Temperature	N/A	N/A	N/A	-	N/A	-
Filtration Efficiency	>92%	99.925%	99.9999%	-	99.925%	-

Weights & Dimensions

Model	Pipe Size BSPP or NPT	Dimensions						Weight	
		Height (H)		Width (W)		Depth (D)			
		mm	ins	mm	ins	mm	ins	kg	lbs
CDAS HL 050	½"	1133	45	559	22	490	19	76	168
CDAS HL 055	½"	1313	52	559	22	490	19	84	185
CDAS HL 060	½"	1510	59	559	22	490	19	93	205
CDAS HL 065	½"	1660	65	559	22	490	19	100	220
CDAS HL 070	¾"	2020	80	559	22	490	19	120	265
CDAS HL 075	1"	1595	63	559	22	682	27	165	364
CDAS HL 080	1"	1745	69	559	22	682	27	180	397
CDAS HL 085	1 ½"	2105	83	559	22	682	27	210	463

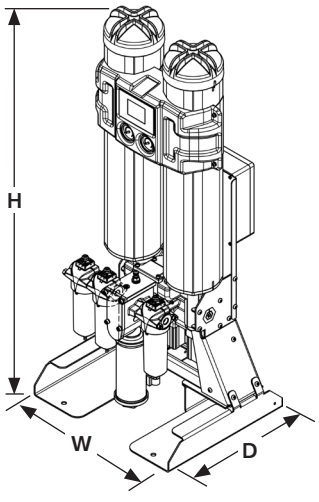

Quality Assurance / IP Rating / Pressure Vessel Approvals

Development / Manufacture	ISO 9001 / ISO 14001
Ingress Protection Rating	IP55 Indoor Use Only
EU	Pressure vessel approved for fluid group 2 in accordance with the Pressure Equipment Directive 2014/68/EU
USA	Approval to ASME VIII Div. 1 not required
AUS	Approval to AS1210 not required
For use with Compressed Air Only	

Parker Worldwide

Europe, Middle East, Africa

AE – United Arab Emirates, Dubai
Tel: +971 4 8127100

AT – Austria, St. Florian
Tel: +43 (0)7224 66201

AZ – Azerbaijan, Baku
Tel: +994 50 2233 458

BE/NL/LU – Benelux, Hendrik Ido Ambacht
Tel: +31 (0)541 585 000

BY – Belarus, Minsk
Tel: +48 (0)22 573 24 00

CH – Switzerland, Etoy
Tel: +41 (0)21 821 87 00

CZ – Czech Republic, Prague
Tel: +420 284 083 111

DE – Germany, Kaarst
Tel: +49 (0)2131 4016 0

DK – Denmark, Ballerup
Tel: +45 43 56 04 00

ES – Spain, Madrid
Tel: +34 902 330 001

FI – Finland, Vantaa
Tel: +358 (0)20 753 2500

FR – France, Contamine s/Arve
Tel: +33 (0)4 50 25 80 25

GR – Greece
Tel: +30 69 44 52 78 25

HU – Hungary, Budaörs
Tel: +36 23 885 470

IE – Ireland, Dublin
Tel: +353 (0)1 466 6370

IL – Israel
Tel: +39 02 45 19 21

IT – Italy, Corsico (MI)
Tel: +39 02 45 19 21

KZ – Kazakhstan, Almaty
Tel: +7 7273 561 000

NO – Norway, Asker
Tel: +47 66 75 34 00

PL – Poland, Warsaw
Tel: +48 (0)22 573 24 00

PT – Portugal
Tel: +351 22 999 7360

RO – Romania, Bucharest
Tel: +40 21 252 1382

RU – Russia, Moscow
Tel: +7 495 645-2156

SE – Sweden, Borås
Tel: +46 (0)8 59 79 50 00

SL – Slovenia, Novo Mesto
Tel: +386 7 337 6650

TR – Turkey, Istanbul
Tel: +90 216 4997081

UK – United Kingdom, Warwick
Tel: +44 (0)1926 317 878

ZA – South Africa, Kempton Park
Tel: +27 (0)11 961 0700

North America

CA – Canada, Milton, Ontario
Tel: +1 905 693 3000

US – USA, Cleveland
Tel: +1 216 896 3000

Asia Pacific

AU – Australia, Castle Hill
Tel: +61 (0)2-9634 7777

CN – China, Shanghai
Tel: +86 21 2899 5000

HK – Hong Kong
Tel: +852 2428 8008

IN – India, Mumbai
Tel: +91 22 6513 7081-85

JP – Japan, Tokyo
Tel: +81 (0)3 6408 3901

KR – South Korea, Seoul
Tel: +82 2 559 0400

MY – Malaysia, Shah Alam
Tel: +60 3 7849 0800

NZ – New Zealand, Mt Wellington
Tel: +64 9 574 1744

SG – Singapore
Tel: +65 6887 6300

TH – Thailand, Bangkok
Tel: +662 186 7000

TW – Taiwan, Taipei
Tel: +886 2 2298 8987

South America

AR – Argentina, Buenos Aires
Tel: +54 3327 44 4129

BR – Brazil, Sao Jose dos Campos
Tel: +55 080 0727 5374

CL – Chile, Santiago
Tel: +56 22 303 9640

MX – Mexico, Toluca
Tel: +52 72 2275 4200

©2026 Parker Hannifin Corporation. All rights reserved.

PISCDASHL50-85-03-EN

EMEA Product Information Centre
Free phone: 00 800 27 27 5374
(from AT, BE, CH, CZ, DE, DK, EE, ES, FI, FR, IE, IL, IS, IT, LU, MT, NL, NO, PL, PT, RU, SE, SK, UK, ZA)

US Product Information Centre
Toll-free number: 1-800-27 27 537

www.parker.com/gsfe