# Parker PSA Nitrogen Gas Generation Systems & Pharmaceutical Grade Nitrogen

## Fact Sheet



Pharmaceutical grade nitrogen is generally specified for the production of medicines during the manufacturing process to prevent oxidisation and or flammability of active pharmaceutical ingredients, (API's). It is often used for blanketing reactor and blending vessels, as well as for storage and packaging of ingredients and finished products. In addition, processes such as micronising and pressure transfer often prescribe inert gas in place of compressed air.



The specification for pharmaceutical grade nitrogen gas is covered mainly by three standards – European Pharmacopoeia, (EP), the United States of America Food & Drug Administration, (FDA) and Japanese Pharmacopeia, (JP).

Each of these bodies has differing specifications but in general gives guidelines for the contaminant levels permissible in the nitrogen gas as well as the actual content of nitrogen gas itself.

The table below is typical of a gas company specification data sheet concerning the purity of process nitrogen and research nitrogen grades for pharmaceutical applications. For confirmation please visit a gas company site for up to date information on the purity of liquid / cylinder nitrogen.

The table below represents information from one of the largest gas companies in the World, concerning their pharmaceutical grade nitrogen.

| | | | Pharmacopoeia Monograph | | | | Gas Company Product | |
|---|---|---|---|---|---|---|---|---|
| **Gas** | **Chemical Formula** | **Unit** | **EP** | **EP Low $O_2$** | **FDA** | **JP** | **Process Grade** | **Research Grade** |
| **Nitrogen** | **$N_2$** | **%** | ≥99.5 | ≥99.5 | ≥99.0 | ≥99.5 | ≥99.5* | ≥99.999* |
| **Water** | **$H_2O$** | **PPM** | <67 | | | | | |
| **Oxygen** | **$O_2$** | **PPM** | <50 | <5 | <1% | | <5 | <3 |
| **Carbon Monoxide** | **CO** | **PPM** | <5 | | <10 | | <5 | <5 |
| **Carbon Dioxide** | **$CO_2$** | **PPM** | <300 | | | | <300 | <300 |
| **Argon** | **Ar** | **%** | | <0.5 | <0.5 | | | |
| **Odour** | | | Not detectable | | | | Not detectable | |
| **Total Hydrocarbons** | **CnHm** | **PPM** | | <1 | | | | |

*Including small quantities of rare and inert gases

ENGINEERING YOUR SUCCESS.

As can be seen from the table, according to the gas companies, their process nitrogen is specified as greater than 99.5% nitrogen content and research grade as greater than 99.999% nitrogen.

However, if the contaminant volumes are taken into consideration, simple mathematical calculations show that the 99.5% & 99,999% nitrogen purity levels cannot be achieved with the residual argon content and other contaminants.

(This is despite the fact that the EU, FDA & JP specifications only state a maximum of 99,0% to 99,5% nitrogen content requirement)

In reality, the nitrogen purity level is the assay of nitrogen plus argon and other rare trace inert gases with regards to maximum remaining oxygen content and other more reactive, harmful gases.

Below is an extract from a European gas company's oxygen free nitrogen data sheet. It clearly states that the nitrogen specification includes argon.

## Nitrogen (Oxygen free)

- 99.998% minimum Nitrogen (Specification includes argon)
- Conforms to BS 4366

Below is the specification for medial grade nitrogen from a North American gas company with reference to USA pharmacopoeia standards. Again, as can be clearly seen in the description, nitrogen includes "trace inerts".

## Medical Nitrogen – meets Nitrogen NF

| | |
|---|---|
| Nitrogen and trace inerts | 99.0% |
| Oxygen | Not more than than 1.0% |
| Carbon Monoxide | Less than 0.001% |
| Odor | None |

**Layout for food and pharmaceutical applications with sterile gas filtration**

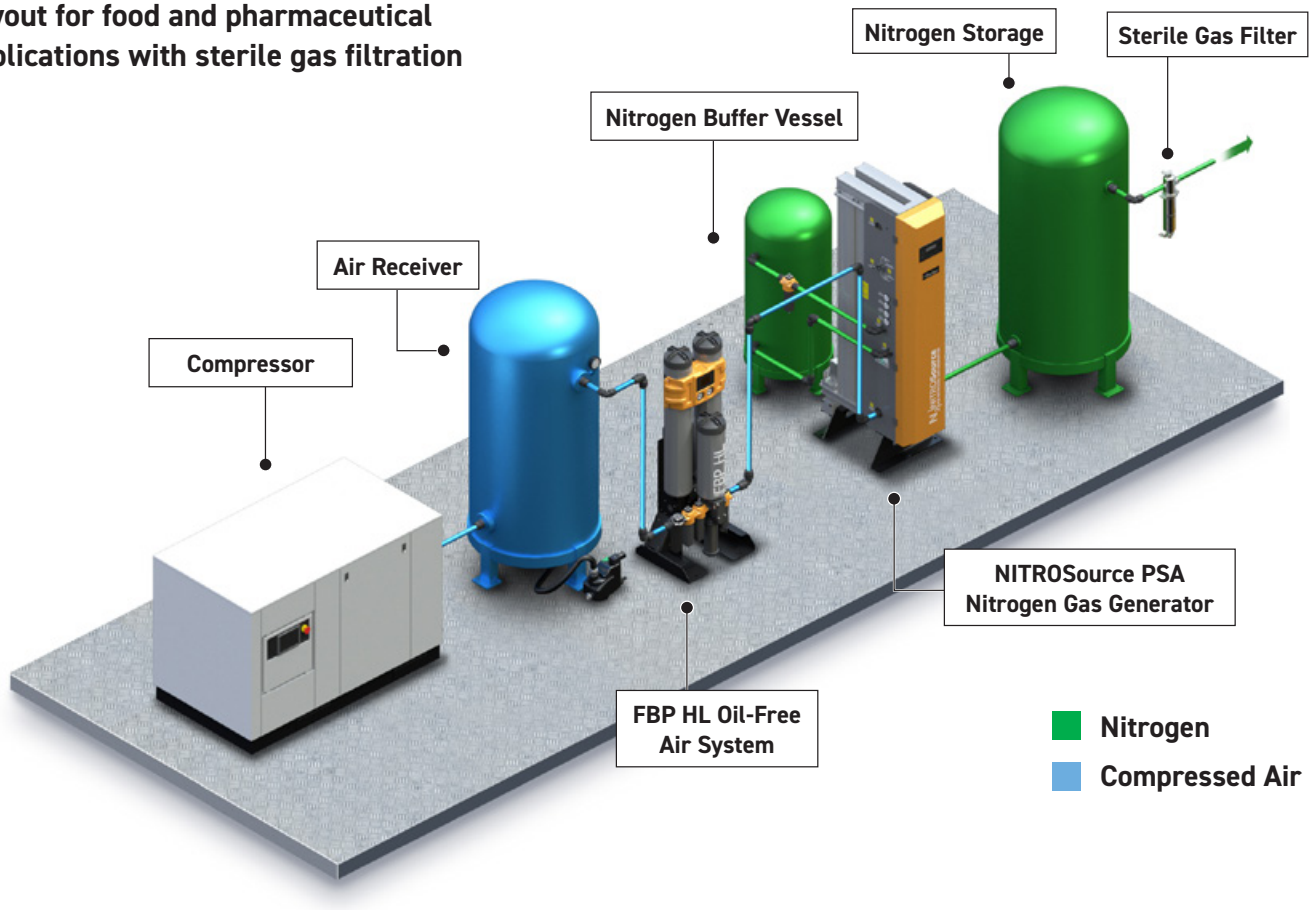

All gas companies produce liquid nitrogen and cylinder gas in a similar process employing cryogenic distillation achieved through a commercial air separation unit, (ASU).

The ASU uses ambient air and compresses it, dries and cleans it before rapidly expanding and cooling it to produce liquid air. There are three main gases that constitute air and are the commercial product of an ASU – nitrogen 78%, Oxygen 20.9% and argon 0.9%. Each of these gases has dissimilar liquefaction temperatures and is extracted accordingly.

It is common for nitrogen produced using this method to have a certain residual argon content in the region of 0.5%. Argon is a true "noble gas" and is more inert than nitrogen, so has no effect on the majority of applications found within the pharmaceutical and most other industries.

If argon was commercially more attractive than nitrogen, it would probably be specified in preference to nitrogen for the majority of pharmaceutical blanketing and processing applications.

It is possible to refine the resultant liquids further to remove more of the impurities including argon and even to produce 99,999% purenitrogen, however the associated expense would make the product commercially unviable.

The table referred to previously states a nitrogen level for each of the pharmacopoeia monographs – 99,5% for both standard and low oxygen grade European Pharmacopoeia, 99% FDA & 99,5% Japanese Pharmacopoeia.

As can be seen, this includes argon and other rare inert gases.

A Parker PSA nitrogen generator specified for pharmaceutical grade nitrogen will achieve all of these standards with regards to inert gas and contaminant content.

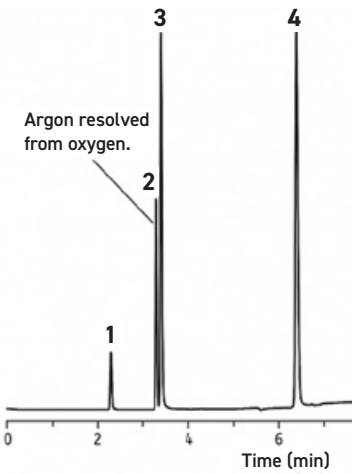


**Peak 1 = Hydrogen** **Peak 3 = Oxygen**
**Peak 2 = Argon** **Peak 4 = Nitrogen**

## Schematic of generic air separation unit (ASU)

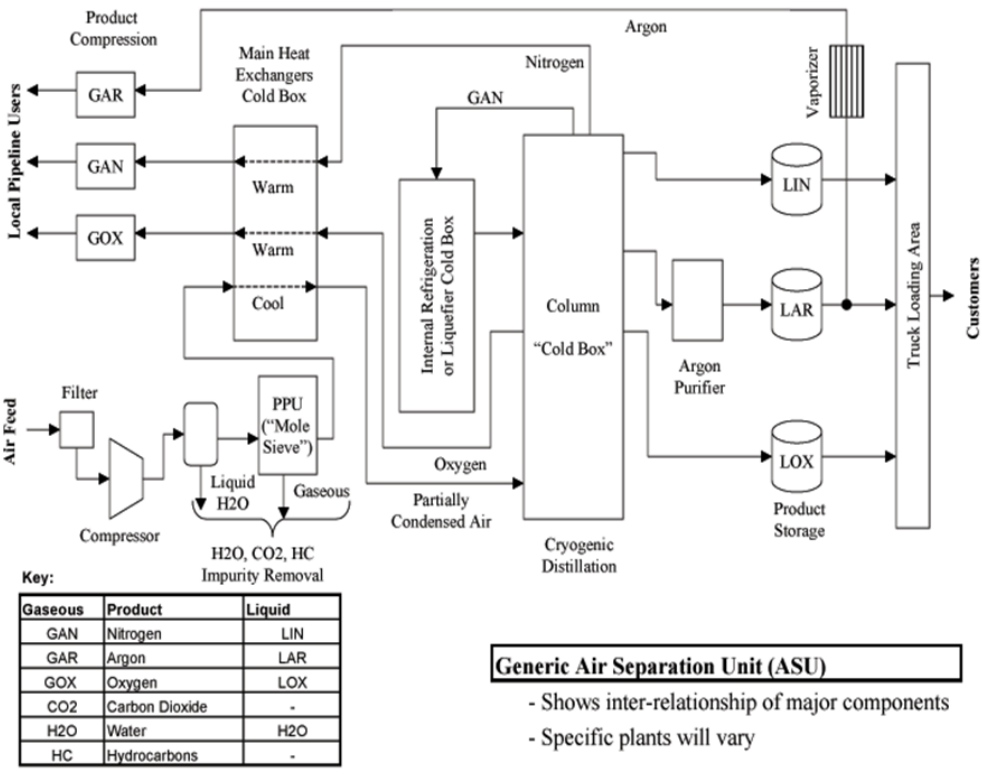


**Key:**

| Gaseous | Product | Liquid |
|---|---|---|
| GAN | Nitrogen | LIN |
| GAR | Argon | LAR |
| GOX | Oxygen | LOX |
| CO2 | Carbon Dioxide | - |
| H2O | Water | H2O |
| HC | Hydrocarbons | - |

**Generic Air Separation Unit (ASU)**

- Shows inter-relationship of major components
- Specific plants will vary

Parker pressure swing adsorption, (PSA) nitrogen gas generators such as the NITROSource PSA and NITROSource Compact PSA models utilize technology identical to the front stage of an ASU, in as much as they use compressed ambient air as the source of the nitrogen gas. However instead of using cryogenic distillation, a carbon molecular sieve, (CMS), is employed to trap and remove the unwanted oxygen and other contaminants.

Parker PSA gas generators have been independently tested by an accredited UKAS testing laboratory to demonstrate that the emitted gas complies with European Pharmacopoeia specifications. A copy of the testing certificate is attached to this document.

It is also important to note that when testing nitrogen gas for residual Oxygen content, the use of an electrochemical cell type measuring apparatus is specified by bodies such as European Pharmacopoeia, in preference to Gas Chromatograph type analytical techniques.

This is because small molecules such as oxygen and argon are difficult to separate using the most common mode of chromatography - GLC, (Gas-Liquid Chromatography), and are often detected concurrently. Often separation will not occur unless sub-ambient cryogenic cooling systems are used. The combined peak of both gases can give what appears to be an artificially high and inaccurate Oxygen volume.

Gas-Solid Chromatography is more effective at separating oxygen and argon.

As can be noted the very close proximity of the argon and oxygen peaks even with gas solid chromotography analysis.

Parker has many hundreds of nitrogen generation sytems operating for many years within the pharmaceutical sector for applications including reaction blanketing and API production.

The majority of pharmaceutical companies understand the difference between cryogenic and on-site produced nitrogen gas using pressure swing adsorption with carbon molecular sieve, with regards to the inert gas constituents and acknowledge that the argon content is acceptable within their processes. If necessary GMP protocols can be written for specific applications and processes. It is the reactive contaminants of the nitrogen gas the relevant pharmaceutical bodies are specifying to limit and not the inert components that the gas is designed to be used for in the first place – as an inert gas to primarily exclude oxygen arising from ambient air ingress, causing, fire, explosion, microbial growth or oxidisation.

Edwards Analytical
Chemilab Bldg, C/O INEOS Compounds – Aycliffe
School Lane, Newton Aycliffe, Co. Durham, DL5 6EA
T: +44 1325 311263 E: enquiries@edwards-analytical.com

**Project Number:** 14/EA/08/19
**Date Samples Received:** August & September 2014

# Executive Summary Report
Version:V003

Client: Parker Hannifin Manufacturing Ltd

Subject: Compliance test report of NITROSource PSA Nitrogen Gas Generator to the FDA and European Pharmacopeia regulations for use as medical gas generator.

## Introduction:

**Outline:**
NitroSource PSA Nitrogen Gas Generator is a redesign of the MAXIGAS Nitrogen Generator. The components tested in this exercise are additional components that come into contact with the product gas.

**Specification:**

1. The gas product generated is to be compliant in purity to the European Pharmacopeia for medical grade gasses (Nitrogen) and EIGA Minimum Specifications for Food gas applications.
2. The additional component product contact materials (polymeric) are to be compliant in stability from extractable and leachability to the FDA CFR food contact regulation; EC Food contact regulations and European Pharmacopia for polymeric materials designed to come into contact with pharmaceutical products.

## Methods of Analysis:

**Analysis monographs:**

- FDA 21 CFR Part 177.2600 Nitrile Rubbers
- FDA 21 CFR Part 177.1520 Polyolefins
- EC 10/2011 "Plastics in contact with food"
- European Pharmacopeia: EP 3.2.9 Rubber Closures
- European Pharmacopeia: EP 3.1.3 Polyolefins
- European Pharmacopeia: EP 1247 Nitrogen gas
- EIGA Minimum Specifications for food gas applications IGC Doc 126/11/E

## Results and Comments

- All product contact polymeric components comply for Extractable and leachable stability.
- Nitrogen Gas generated and tested met the minimum requirements for gas purity to the United States and European Pharmacopeia's and EIGA regulations.

**Certificate Author & Authorisor:** 09th Feb 2017

JH Edwards



Edwards' Analytical contract laboratory is considered to comply with the principles of Good Manufacturing Practice as detailed in Directive 2003/94/EC.

Edwards Analytical

Edwards Analytical
Chemilab Bldg, C/O INEOS Compounds – Aycliffe
School Lane, Newton Aycliffe, Co. Durham, DL5 6EA
T: +44 1325 311263 E: enquiries@edwards-analytical.com

**Project Number:** 14/EA/08/19-Gas
**Date received:** Nitrogen gas samples taken October 2014
**Sample Details:** 5 gas sampling bags of nitrogen product gas were taken for analysis – labelled 1, 2, 3, 4 & 5 respectively.

# Analysis Certificate

Version:V003

Client: Parker Hannifin Manufacturing Ltd
Subject: Compliance testing of Nitrogen gas purity generated by NITROSource PSA Nitrogen Generator.

## Introduction:

Compliance testing of product gas (Nitrogen) produced by redesigned NITROSource PSA Nitrogen Generator.
Specification European Pharmacopeia – not less than 99.5 per cent V/V of N2. Limited impurities specification:

| | |
|---|---|
| Oxygen | ≤ 50ppm |
| Carbon Dioxide | ≤ 300ppm |
| Carbon monoxide | ≤ 5ppm |
| Water | ≤ 60ppm |

EIGA Minimum Specification's for Food Gas Applications – IGC Doc 126/11/E greater than 99%.

## Methods of Analysis:

- European Pharmacopeia – Nitrogen gas.
- EIGA Minimum Specifications for Good Gas Applications.

Analysis using Gas Chromatograph with Kathetrometer (hot-wire) detector with Concentric column for Nitrogen gas purity. Gas samples introduced by direct injection. Each sample tested in triplicate.

## Analytical Summary:

Nitrogen Gas generated and complied with the minimum requirements for gas purity to the EIGA, United States and European Pharmacopeia.

**Certificate Author & Authorized:** 09th Feb 2017

JH Edwards
Quality Manager



Edwards' Analytical contract laboratory is considered to comply with the principles of Good Manufacturing Practice as detailed in Directive 2003/94/EC.

Edwards Analytical

The certificates above demonstrate compliance with Pharmaceutical grade nitrogen not only from a gas quality perspective but also with reference to materials of construction. These certificates have been produced by an independent 3rd party authorised compliance and testing laboratory.

Phil Green – Market Development Manager – Industrial Gas Generation.

# Parker Worldwide

## Europe, Middle East, Africa

**AE – United Arab Emirates,** Dubai
Tel: +971 4 8127100

**AT – Austria,** St. Florian
Tel: +43 (0)7224 66201

**AZ – Azerbaijan,** Baku
Tel: +994 50 2233 458

**BE/NL/LU – Benelux,** Hendrik Ido Ambacht
Tel: +31 (0)541 585 000

**BY – Belarus,** Minsk
Tel: +48 (0)22 573 24 00

**CH – Switzerland,** Etoy
Tel: +41 (0)21 821 87 00

**CZ – Czech Republic,** Prague
Tel: +420 284 083 111

**DE – Germany,** Kaarst
Tel: +49 (0)2131 4016 0

**DK – Denmark,** Ballerup
Tel: +45 43 56 04 00

**ES – Spain,** Madrid
Tel: +34 902 330 001

**FI – Finland,** Vantaa
Tel: +358 (0)20 753 2500

**FR – France,** Contamine s/Arve
Tel: +33 (0)4 50 25 80 25

**GR – Greece**
Tel: +30 69 44 52 78 25

**HU – Hungary,** Budaörs
Tel: +36 23 885 470

**IE – Ireland,** Dublin
Tel: +353 (0)1 466 6370

**IL – Israel**
Tel: +39 02 45 19 21

**IT – Italy,** Corsico (MI)
Tel: +39 02 45 19 21

**KZ – Kazakhstan,** Almaty
Tel: +7 7273 561 000

**NO – Norway,** Asker
Tel: +47 66 75 34 00

**PL – Poland,** Warsaw
Tel: +48 (0)22 573 24 00

**PT – Portugal**
Tel: +351 22 999 7360

**RO – Romania,** Bucharest
Tel: +40 21 252 1382

**RU – Russia,** Moscow
Tel: +7 495 645-2156

**SE – Sweden,** Borås
Tel: +46 (0)8 59 79 50 00

**SL – Slovenia,** Novo Mesto
Tel: +386 7 337 6650

**TR – Turkey,** Istanbul
Tel: +90 216 4997081

**UK – United Kingdom,** Warwick
Tel: +44 (0)1926 317 878

**ZA – South Africa,** Kempton Park
Tel: +27 (0)11 961 0700

## North America

**CA – Canada,** Milton, Ontario
Tel: +1 905 693 3000

**US – USA,** Cleveland
Tel: +1 216 896 3000

## Asia Pacific

**AU – Australia,** Castle Hill
Tel: +61 (0)2-9634 7777

**CN – China,** Shanghai
Tel: +86 21 2899 5000

**HK – Hong Kong**
Tel: +852 2428 8008

**IN – India,** Mumbai
Tel: +91 22 6513 7081-85

**JP – Japan,** Tokyo
Tel: +81 (0)3 6408 3901

**KR – South Korea,** Seoul
Tel: +82 2 559 0400

**MY – Malaysia,** Shah Alam
Tel: +60 3 7849 0800

**NZ – New Zealand,** Mt Wellington
Tel: +64 9 574 1744

**SG – Singapore**
Tel: +65 6887 6300

**TH – Thailand,** Bangkok
Tel: +662 186 7000

**TW – Taiwan,** Taipei
Tel: +886 2 2298 8987

## South America

**AR – Argentina,** Buenos Aires
Tel: +54 3327 44 4129

**BR – Brazil,** Sao Jose dos Campos
Tel: +55 080 0727 5374

**CL – Chile,** Santiago
Tel: +56 22 303 9640

**MX – Mexico,** Toluca
Tel: +52 72 2275 4200

©2021 Parker Hannifin Corporation. All rights reserved.

FSGSFEPHARMCEUNITRO-00-EN

**EMEA Product Information Centre**
**Free phone: 00 800 27 27 5374**
(from AT, BE, CH, CZ, DE, DK, EE, ES, FI, FR, IE, IL, IS, IT, LU, MT, NL, NO, PL, PT, RU, SE, SK, UK, ZA)

**US Product Information Centre**
**Toll-free number: 1-800-27 27 537**

www.parker.com